5

DepED
DEPARTMENT OF EDUCATION

Science

Quarter 3 – Module 1: Measuring Motion in Terms of Distance and Time

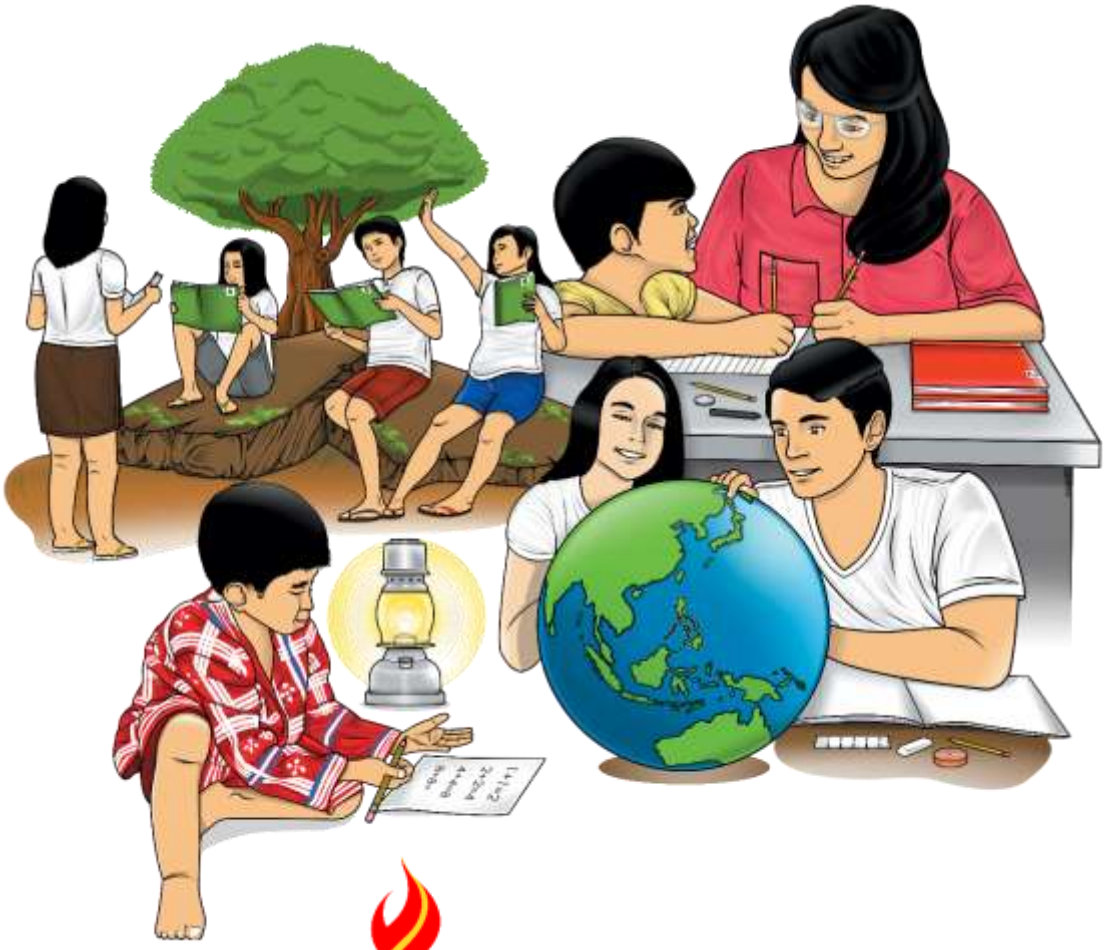

ALTERNATIVE DELIVERY MODE
ADM

Science– Grade 5
Alternative Delivery Mode
Quarter 3 – Module 1: Measuring Motion in Terms of Distance and Time
First Edition, 2020

Published by the Department of Education
Secretary: Leonor Magtolis Briones
Undersecretary: Diosdado M. San Antonio

Development Team of the Module

Writer: Margarita R. Gabitanan

Content Evaluators: Carmen R. Lim, Joel Christian R. Salentes , Ryan R. Tiu

Language Editors: Florita L. Lee, Maria Victoria R. Valenzona, Nestor Allan M. Matutes

Illustrators: Elpidio S. Palacio Jr., Jose Marie E. Baculi

Layout Artist: Marjorie P. Gabumpa, Ana Lorma A. Dahiroc

Management Team: Ma. Gemma M. Ledesma**,** Bebiano I. Sentillas**,**
Rosemarie M. Guino, Joy B. Bihag
Ryan R. Tiu, Marilyn B. Siao,
Roberto N. Mangaliman, Ma. Luz I. Orbe,
Cecilia A. Arga, Eveliza S. Quinoñes

Printed in the Philippines by _____

Department of Education – Regional No. VIII

Office Address: Government Center, Cadahug, Palo, Leyte
Telefax: 053 – 832-2997
E-mail Address: region8@deped.gov.ph

5

Science

Quarter 3 – Module 1:
Measuring Motion in Terms of Distance and Time

DepED
DEPARTMENT OF EDUCATION

Introductory Message

This Self-Learning Module (SLM) is prepared so that you, our dear learners, can continue your studies and learn while at home. Activities, questions, directions, exercises, and discussions are carefully stated for you to understand each lesson.

Each SLM is composed of different parts. Each part shall guide you step-by-step as you discover and understand the lesson prepared for you.

Pre-tests are provided to measure your prior knowledge on lessons in each SLM. This will tell you if you need to proceed on completing this module or if you need to ask your facilitator or your teacher's assistance for better understanding of the lesson. At the end of each module, you need to answer the post-test to self-check your learning. Answer keys are provided for each activity and test. We trust that you will be honest in using these.

In addition to the material in the main text, Notes to the Teacher are also provided to our facilitators and parents for strategies and reminders on how they can best help you on your home-based learning.

Please use this module with care. Do not put unnecessary marks on any part of this SLM. Use a separate sheet of paper in answering the exercises and tests. And read the instructions carefully before performing each task.

If you have any questions in using this SLM or any difficulty in answering the tasks in this module, do not hesitate to consult your teacher or facilitator.

Thank you.

What I Need to Know

This module was designed to help you to understand how to describe and to measure motion in terms of distance and time. The scope of this module permits it to be used in many different learning situations. The language used recognizes the diverse vocabulary level of students. The lessons are arranged to follow the standard sequence of the course. But the order in which you read them can be changed to correspond with the textbook you are now using.

This module will help you describe the motion of an object by tracing and measuring its change in position (distance traveled) over a period of time.

The module is divided into two lessons, namely:

- Lesson 1 – Motion
- Lesson 2 – Distance and Speed

After going through this module, you are expected to:

1. define motion;
2. understand the concepts of speed and time on distance traveled;
3. measure the speed of an object;
4. identify the measuring device used to measure distance; and
5. appreciate the importance of reference point in understanding motion.

What I Know

Directions: Read and understand the questions below. Choose the letter of the best answer. Write the chosen letter on a separate sheet of paper.

1. Which of the following is abasic unit of distance?
   A. inch
   B. feet
   C. meter
   D. yard

2. Which is NOT a unit of speed?
   A. kilometer/hour
   B. meter/second
   C. miles/hour
   D. second/meter

3. Which is NOT used for measuring distance?
   A. measuring wheel
   B. meterstick
   C. tape measure
   D. stopwatch

4. Which is the reference point of a boy leaving fromhome to school?
   A. canteen
   B. classroom
   C. home
   D. school ground

5. Which of the following shows motion?
   A. a boy watching TV
   B. a dog barking at strangers
   C. pillows on bed
   D. a mother going to market

6. A car traveled 30 kilometers for 2 hours, what is its speed?
   A. 15.0km/h
   B. 28.0km/h
   C. 30.0km/h
   C. 60.0km/h

7. Which of the following demonstrates motion?
   A. A boy jogging in place
   B. A dog barking at the garage
   C. A girl running towards his father
   D. A boy running on a treadmill device

8. Why do we need measuringdevice to measurelength or distance?
   A. To have an accurate data
   B. To be familiar with the use of each tools
   C. To have experience using tools like ruler, meter stick, tape measure, etc.
   D. None of the above

9. Why do we need to use the metric system of measurement?
   A. Because it is used by many scientists.
   B. Because it is important to describe motion.
   C. Because it is necessary to describe movement.
   D. Because it is easier to understand each other's data.

10. How can a biker travel a great distance in a specified time?
    A. Pedal faster to increase the speed of the bike
    B. Pedal slowly to decrease the speed of the bike
    C. Increase the distance it will cover in the same time allotment
    D. Pedal faster to increase the distance it will take in a specified time.

Lesson 1 Motion

Everything appears to be in motion. Our daily activities keep us moving. We need to get moving in order to finish our tasks. We move objects by picking, pushing, and pulling them. We all take the same route to school, whether it's short or long. We will always be in motion in our daily lives.

What's In

Directions: Find the five (5) words that can be associated with MOTION. Words may appear straight across, backward straight across, up and down, down and up, and diagonally. Write the words that you have found in your science notebook.

M	D	E	C	N	A	T	S	I	D
P	U	S	H	G	V	C	F	C	P
I	I	J	S	X	E	Q	O	X	N
Z	R	A	Y	V	A	M	R	P	C
W	U	E	M	I	T	F	C	H	C
R	K	Y	X	A	L	P	E	R	Q
B	N	I	L	S	U	U	N	L	P
R	C	T	Q	L	J	V	F	W	O
U	I	D	L	U	F	M	K	Q	A
D	A	S	A	O	V	I	T	C	P

What's New

PUSH AND GO

What you need:

toy car
meter stick or ruler
stopwatch

Illustrated by Elpidio S. Palacio Jr. and Jose Marie E. Baculi
Figure 1. A toy car showing motion

What to do:

1. Find a flat surface on the floor.
2. Mark a starting point on the floor.
3. Put the toy car on the starting line. See to it that the front end of the toy car is aligned to the starting line.
4. Gently push the toy car with your hand. Then, record the time it travels using your stopwatch and the distance using the meterstick or ruler.
5. Bring the toy car back to the starting line, but push the toy car with a greater force than the first trial. Write your data for the second trial in Table 1.
6. Repeat step number 5 for trials 3 - 5 with increasing forces applied. Record your data in Table 1. Write your observations in your science notebook.

Table 1. Distance and time traveled by the toy car.

Trial no.	**Distance covered (cm)**	**Time covered (s)**
1		
2		
3		
4		
5		

Guide Questions

Directions: Based on the activity, answer the following questions. Write your answers in your science notebook.

1. What action makes the toy car move?
2. In which trial did the toy car travel the shortest distance? Why?
3. In which trial did the toy car travel the longest distance? Why?

What is It

The illustrations in the previous activity indicate that force is exerted when you push the toy car. When you lift a sack of rice, you exert force by pulling the sack upward. When you push a stalled car, you exert force to move it forward. When you mop a floor using a rag, you exert force by moving the rag back and forth. When you close a door, you exert force by pulling on the doorknob. So, we define force as a push or a pull.

Forces may initiate and influence motion. When you exert force, therefore, motion is produced. Motion is a change of place or position in relation to time due to the applied force. How far it moves, or it is moved is the distance. Distance is measured in meter (m) same as for the length according to the International Bureau of Weights and Measurements (BIMP), but the standard unit for distance on a smaller scale is centimeter (cm) and kilometer (km) for the bigger one.

When there is movement, there is motion. Motion is also defined as a change in position with respect to a reference point. A **reference point** is a place or object used for comparison to determine if something is in motion. An object is in motion if it changes position relative to a reference point

The fastness and slowness of a motion at a certain distance can be calculated using the time it takes for an object to cover the distance. The second (s) is the basic unit of time, but for longer durations, minute (min or m) or hour (h) may be used.

What's More

Activity 1: Motion in Everyday Life

Directions: Give at least five (5) activities at home and school, where there is motion. Copy the table below and write your answer in your science notebook.

Home	School
1.	1.
2.	2.
3.	3.
4.	4.
5.	5.

Activity 2: Illustrating Motion

Directions: Draw an illustration that shows motion and reference point. Draw your illustration in your science notebook.

Lesson 2 Distance

In the previous lesson, you have learned about motion. In this lesson, you will learn how to measure the distance traveled by an object. You can tell how fast or slow you move, depending on the distance that you are taking.

What's In

Directions: Study the picture below. Answer the following questions in your science notebook.

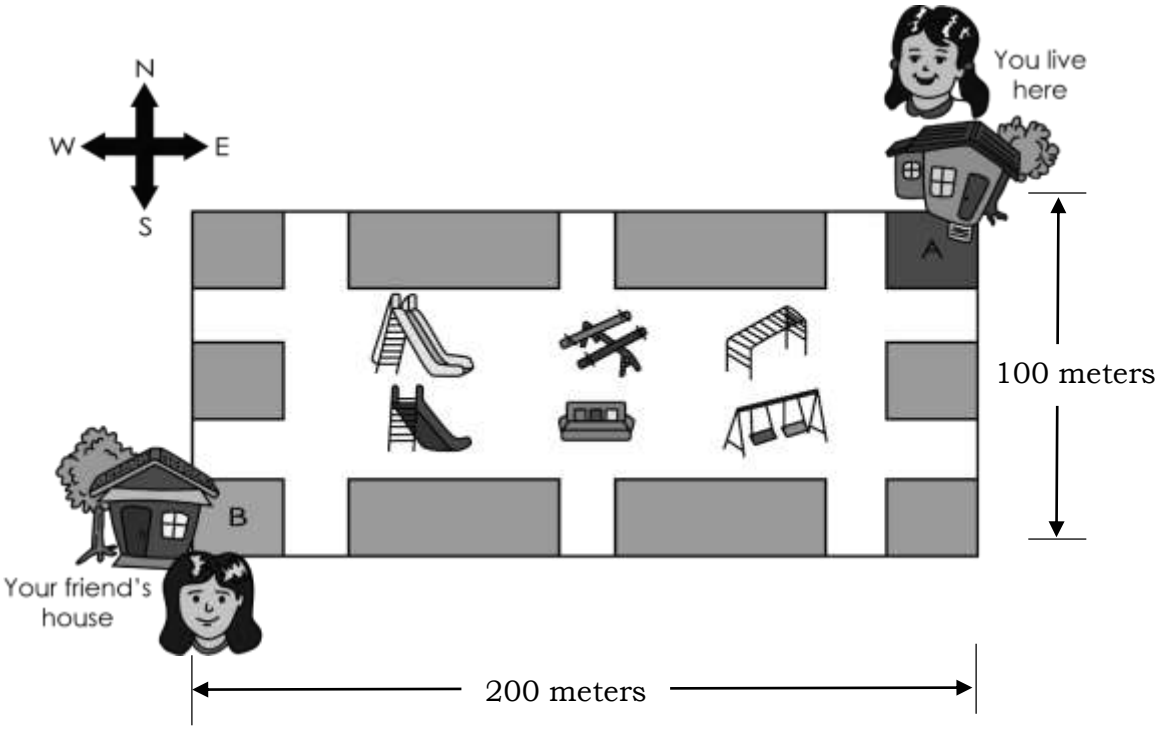

Illustrated by Elpidio S. Palacio Jr. and Jose Marie E. Baculi
Figure 1. Map showing the distance traveled

Questions:

1. If you were to go to your friend's house, draw an arrow to show which route or way you can take.

2. If you're going to your friend's house and walk from west to south, will the other route take the same distance? Why?

3. How far do you think is your house from your friend's house?

4. How will you measure the distance between your house and your friends house?

What's New

Directions: Analyze the picture below. Answer the following questions in your science notebook.

Illustrated by Elpidio S. Palacio Jr. and Jose Marie E. Baculi
Figure 2. A skateboarder on the street

1. What did the boy do in order to move with the skateboard?
2. How can you measure the speed of the skateboarder?

What is It

Distance is a measure of how far or close two points are in relation to one another based on the actual travel of an object. It can be measured in a variety of ways, including time, landmarks, and body parts.

The total path length is commonly used to describe distance. It is the distance between a known reference point and a designated position. Distance is a scalar quantity, which means that it can only be expressed in magnitude. It is measured in units such as meters, kilometers, feet, and so on. The standard unit for distance, however, is the meter.

There are appropriate tools and ways to measure distance so that you can tell whether an object is far or near. Distance should always be exact, measured accurately, and based on a standard unit of measurement in science. Distance should be measured scientifically with a measuring device such as a ruler, meter stick, tape measure, measuring wheel, or ultrasonic distance measurer.

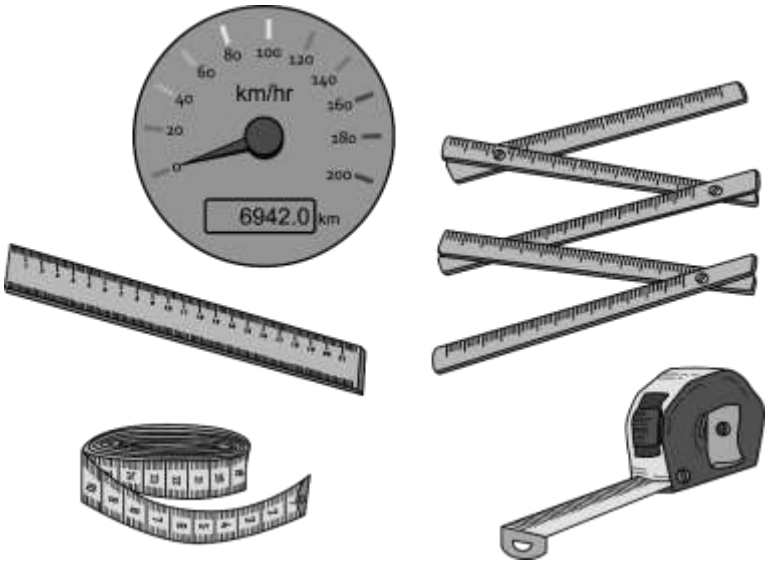

Illustrated by Elpidio S. Palacio Jr. and Jose Marie E. Baculi
Figure 3. Devices used in measuring distance

Measurement: The Metric System

We can better understand each other's data if we use a standard unit of measurement. Using different units of measurement can lead to misunderstanding and confusion.

Meter is the standard unit of measurement for distance or length in the metric system. When referring to a distant place, you simply just add the prefix kilo. If the length is very short, prefixes such as deci-, centi-, and milli- are used.

By conversion, we can get the following values used in the metric system of measurement:

METRIC SYSTEM CONVERSION

1 kilometer (km) = 1000 meters (m)

1 meter = 100 centimeters (cm)

1 meter = 1000 millimeter (mm)

Example:

Linda is traveling from town A to town B with a distance of 10 kilometers. How many meters was she able to travel?

Answer: 10000 meters

Speed: Distance over Time

Speed is the distance traveled over a certain period of time. A moving object's distance traveled is affected by its speed, or the rate at which it moves. The faster an object moves, the less time it takes to travel at a given distance. On the other hand, the slower the object moves, the longer it takes to travel the same distance.

Thus, the faster an object moves in a given time, the greater the distance it travels, and the slower it moves, the less distance it travels.

Speed is calculated by dividing the distance traveled by a moving object by the time it takes to travel the distance.

This can be expressed as:

$$\text{Speed} = \frac{\text{distance traveled}}{\text{time}} \quad \text{or } S = \frac{d}{t}$$

The measurement of speed can be in meters per second (m/s) or kilometers/hour (km/h or kph), or miles per hour (mi/h).

For example, David was able to run 300 meters in just 60 seconds or 1 minute. What is his speed?

Solution: $speed = \frac{d}{t}$

$$= \frac{300m}{60\,s}$$

$$= 5\ {}^{m}/_{s}$$

The formula speed can be rearranged, just like any other equation. It can be rearranged in three ways:

1.) speed = distance ÷ time
2.) distance = speed × time
3.) time = distance ÷ speed

What's More

Activity 1: The Amazing Marble

What you need:

3 books of equal thickness

1 marble

2 rulers of the same size

1 tape measure

What to do:

1. Gather all the materials needed.
2. Place the two rulers on a book at a distance that would allow a marble to pass between them. The rulers would act as a ramp for the marbles to pass through. See figure 4.

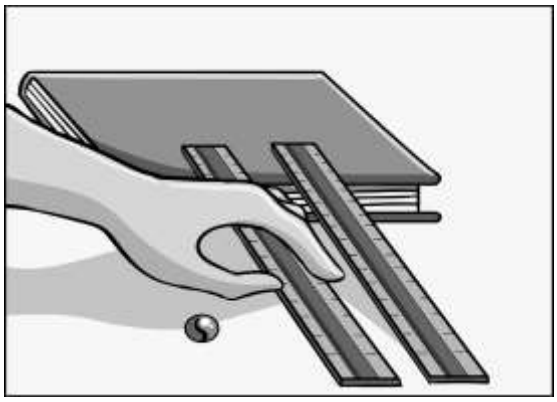

Illustrated by Reyson Joe G. Cañedo

Figure 4. Two rulers on a book

3. Allow the marble to pass between the rulers. Then, record the time it travels using your stopwatch and the distance using the meterstick or ruler.

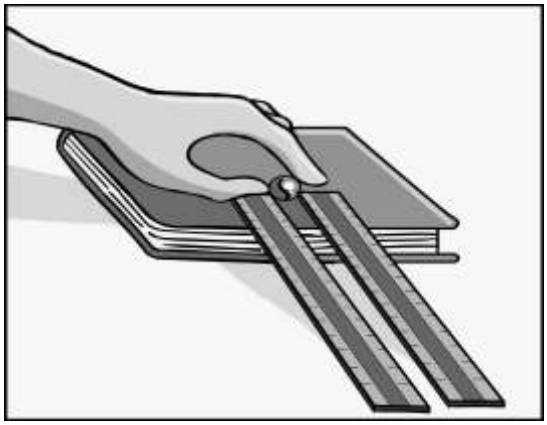

Illustrated by Reyson Joe G. Cañedo

Figure 5. Marble between the rulers

4. Put another book on top of the book, repeat steps 2 and 3.
5. Put another book on top of the two books, repeat steps 2 and 3.
6. Record your data in Table 1.

Table 1. The distance travelled by the marble (cm)

Number of Books	**Distance travelled by the marble (cm)**	**Time Covered (s)**
1 book (setup A)		
2 books (setup B)		
3 books (setup C)		

Guide Questions:

Directions: Based on the activity, answer the following questions. Write your answers in your science notebook.

1. What setup resulted in the marble travelling the shortest distance? Why do you think the marble travelled the shortest distance using this setup?
2. What setup resulted in the marble travelling the longest distance? Why do you think the marble travelled the longest distance using this setup?
3. How can measuring distance help us compare things in motion?
4. What effect does height have on the distance a marble travels after being launched from a ramp?
5. What is the speed of the marble in the three setups?

Activity 2: Moving Buses

Illustrated by Elpidio S. Palacio Jr. and Jose Marie E. Baculi

Figure 4. Moving buses

Study Table 2. Determine the speed of each moving vehicle using the formula:

Speed = distance/time

The time and distance of each vehicle are given as follows:

Table 2. Speed of the buses with the same distance travelled

Bus	Distance travelled	Time	Speed
A	50 meters (m)	5 seconds (s)	
B	50 m	10 s	
C	50 m	20 s	

Guide Questions:

Directions: Refer to Table 2. Answer the following questions. Write your answer on a separate sheet of paper.

1. Were the buses in motion?
2. Which bus moved the fastest? The slowest?
3. How did you determine the fastest moving bus? The slowest moving bus?
4. What formula did you use in calculating the speed?
5. Arrange the result from the slowest to fastest.

What I Have Learned

A. Directions: Complete the following sentences using the words inside the box. Write your answer on a separate sheet of paper.

motion	reference point	force
push or pull	greater	lesser

1. The change in an object's position is initiated and influenced by _____.
2. _____ is a change of location or position of an object.
3. All movement is compared with a background that is assumed stationary. This background is called _____.
4. Force can also be defined as _____.
5. The _____ the mass, the greater the force needed to move the object.

B. Directions: Complete the following sentences using the words inside the box. Write your answers on a separate sheet of paper.

speed	meter	distance
time	measuring	device
science		

1. _____ is the measure of how far or near two points are from one another based on the actual travel of an object.
2. The standard unit of measurement used for distance or length is _____.
3. The distance travelled by a moving object over a period of time is called _____.
4. In _____, distance should always be exact, measured accurately, and based on the unit of measurement.
5. Distances can be measured using different _____.

C. Directions**:** Write **T** if the statement is true and if it is false, write **F**. Write your answers on a separate sheet of paper.

1. The standard unit of measurement of distance or length in the metric system is miles.
2. Meter sticks, tape measures, and rulers are standard measuring devices used to measure distance.
3. In science, distance should always be exact, measured accurately, and based on the unit of measurement.
4. Speed can be calculated by multiplying the distance travelled by an object in motion by the amount of time it used to travel the distance.
5. The greater the speed, the lesser the distance travelled at a given time.

What I Can Do

A. Directions: Name at least five of your daily activities and classify if it involves motion or not. Write your answers in your Science notebook.

Table 3. Some of the daily activities involving motion and without motion

Activities Involving Motion	**Activities not Involving Motion**
1.	1.
2.	2.
3.	3.
4.	4.
5.	5.

B. Directions: Study and fill in the table below by calculating the speed. Write your answers in your Science notebook.

Table 4. Speed spent by different vehicles

Vehicle	**Distance**	**Time**	**Speed**
Car	90km	3 hours	
Truck	295 km	5 hours	
Bicycle	350 km	5 hours	
Tricycle	80 km	2 hours	
Train	200 km	10 hours	

Assessment

Directions: Answer the following questions. Choose the letter of the best answer. Write your answers on a separate sheet of paper.

1. Which of the following does not demonstrate motion?
   A. Ballerina dancing on the stage
   B. Mother walking on the street
   C. Ball rolling on the floor
   D. Pencil on the table

2. Why do we need to use the metric system of measurement?
   A. Because it is used by many scientists.
   B. Because it is important to describe motion.
   C. Because it is necessary to describe movement.
   D. Because it is easier to understand each other's data.

3. Which of the following is the standard unit of measurement used for distance or length?
   A. foot
   B. meter
   C. minute
   D. second

4. A jeepney travels 120 kilometers in 3 hours. What is the average speed?
   A. 40 km/h
   B. 43 km/h
   C. 60 km/h
   D. 120 km/h

5. It is the change of an object's position over the change of time.
   A. position
   B. motion
   C. speed
   D. location

6. It serves as the basis for which the movement of an object can be related to.
   A. reference point
   B. motion
   C. speed
   D. distance

7. A numerical description of how far the objects from each other.
   A. distance
   B. reference point
   C. speed
   D. motion

8. Which of the following demonstrates motion, with the other object as the frame of reference?
   A. a boy jogging in place
   B. a dog barking at the garage
   C. a girl running towards his father
   D. a boy running on a treadmill device

9. Why do we need to use an appropriate device in measuring lengths?
   A. To have an accurate data
   B. To be familiar with the use of each tool
   C. To have experience using tools like a ruler, meter stick, tape measure, etc.
   D. None of the above

10. Why do we need to use the metric system of measurement?
   A. Because many scientists use it.
   B. Because it is important to describe motion.
   C. Because it is necessary to describe movement.
   D. Because it is easier to understand each other's data.

Additional Activities

A. Directions: List down at least five (5) activities/situations where speed and time are related.

B. Directions: Put a check (✓) mark if the given situation shows motion and cross (***X***) mark if otherwise. Write your answers on a separate sheet of paper.

_____1. A farmer is plowing in the field with the help of the carabao.

_____2. A boy is running near the finish line.

_____3. A boy and a girl dancing together across the room.

_____4. My hands as it writes from the left to the right of a paper.

_____5. A cup on the table.

What's More

Activity 1. *Possible answer, answers may vary.*

Home	School
1. Walking to the living room	1. Sweeping the floor
2. A falling cauldron	2. Rolling a pencil
3. Chasing the ball	3. Playing patintero
4. Walking upstairs	4. Running to the canteen
5. Pushing a chair	5. Raising the flag

Lesson 1
What's New

Possible answers. The answer on the table may vary depending on the force exerted by the pupils.

Trial no.	Distance covered (cm)	Time covered (s)
1	10	1
2	44	2
3	78	2
4	148	2
5	173	2

Guide Questions *(Possible Answers)*

1. Pushing the toy car makes it move.
2. Trial number 5. The toy car travels the longest distance because it is when I exerted the greatest force.
3. Trial number 1. The toy car travels the shortest distance because it is when I exerted the least force.

Lesson 1
What's In

M	D	E	C	N	A	T	S	I	D
P	U	S	H	G	V	C	F	C	P
I	I	J	S	X	E	Q	O	X	N
Z	R	A	Y	V	A	M	R	P	C
W	U	E	M	I	T	F	C	H	C
R	K	Y	X	A	L	P	E	R	Q
B	N	I	L	S	U	U	N	L	P
R	C	T	Q	L	J	V	F	W	O
U	I	D	L	U	F	M	K	Q	A
D	A	S	A	O	V	I	T	C	P

What I Know

1. c
2. d
3. d
4. c
5. d
6. a
7. c
8. a
9. d
10. a

Answer Key

What's New

Measuring Motion

1. The boy pushed the skateboard in order to move.
2. By measuring the distance and time travelled of the boy.

Lesson 2

What's In *(Possible answers)*

1.

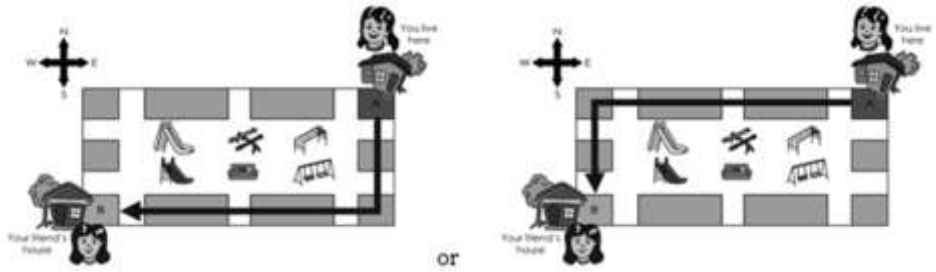

Illustrated by Elpidio S. Palacio Jr. and Jose Marie E. Baculi

2. Yes. Because the distance distance between my house to my friend's house is still 300 meters even if I take the other route.
3. The distance between my house to my friend's house is 300 meters.
4. By using a measuring device like a meterstick or a tape measure.

What's More

Activity 2.

Possible drawing. It may vary depending on the illustration of the pupil.

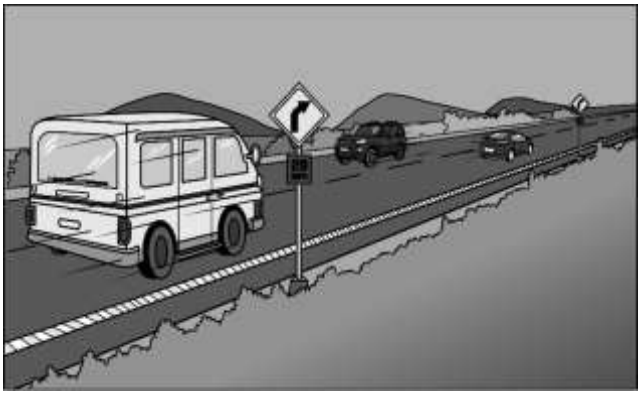

Illustrated by Elpidio S. Palacio Jr. and Jose Marie E. Baculi

What I Have Learned

A.	B.	C.
1.Force	1. Distance	1. False
2.Motion	2. Meter	2.True
3. Reference point	3. Speed	3.True
4.Push or Pull	4. Science	4. False
5. Greater	5. Measuring tools	5.False

What's More

Activity 1: The Amazing Marble

Table 1. The distance traveled by the marble (cm)

Number of Books	Distance travelled by the marble (cm)	Time Covered (s)
1 book (setup A)	40	4
2 books (setup B)	95	4.25
3 books (setup C)	140	4

Note: The answers on the table may vary based on the thickness of the book used in the activity.

Guide Questions:

1. Setup A. Having the least height of the ramp among the other setup, the marble was not able to travel faster.The slower it moves, the less the distance it travels.
2. Setup C. Due to the greatest height of the ramp among the other setup, the marble travelled longer and faster. The faster an object moves, the greater the distance it travels.
3. Measuring distance can tell how an object travel. If the object travel in a certain time then you can calculate the speed of the object, so you can compare things in motion.
4. The height of the ramp affects the speed and the distance travelled by the marble. The higher the ramp, the greater the speed of the marble and the greater distance it travels.
5. Speed of the marble
   (***Note:*** *The answers may vary, it must be based on the data given in table 1.)*
   1. 10 cm/s
   2. 22.35 cm/s
   3. 35 cm/s

Activity 2 Moving Buses

Table 2. Speed of the buses with the same distance travelled

Bus	**Distance travelled**	**Time**	**Speed**
A	50 meters	5 s	10 m/s
B	50 meters	10 s	5 m/s
C	50 meters	20s	2.5 m/s

Guide Questions

1. Yes. The buses are in motion.
2. Bus A move the fastest and Bus C moved the slowest.
3. By looking at the travelled time of the buses.
4. The formula in finding the speed is: speed= distance/time
5. The order from the slowest to fastest is:
   a. Bus C
   b. Bus B
   c. Bus A

Additional Activities

A. (Possible answers)

1. car racing 2.playing games 3.walking 4. swimming 5.running

B. 1.✓ 2.✓ 3. ✓ 4.✓ 5.X

Assessment

1.d 2.d 3.b 4.a 5.c 6.a 7.a 8.c 9.a 10.d

What I Can Do

Note: *Learner's answers may vary.*

A. Table 3. Some of the daily activities involving motion and without motion

Note: *Learner's answers may vary.*

Activities Involving Motion	Activities not Involving Motion
1.Playing ball	1.Looking at the sunset
2.walking in the street	2.standing near the window
3.Riding bicycle	3.sleeping
4.Washing dirty clothes	4.smelling
5.swimming in the beach	5.watching tv

B. Table 4. Speed spent by different vehicles

Vehicle	**Distance**	**Time**	**Speed**
Car	90km	3 hours	30 kph
Truck	295 km	5 hours	59 kph
Bicycle	350 km	5 hours	70 kph
Tricycle	80 km	2 hours	40 kph
Train	200 km	10 hours	20 kph

References

Online Sources

"EASE Module 10: Force And Motion". *Deped LR Portal*. Accessed April 27, 2021. https://lrmds.deped.gov.ph/detail/6802.

"EASE/OHSP Integrated Science Module 3: Force, Motion, And Energy". *Deped LR Portal*. Accessed April 28, 2021. https://lrmds.deped.gov.ph/detail/7888.

"Speed, Velocity, Acceleration, And Friction". 2014. *Deped LR Portal*. Accessed April 28, 2021. https://lrmds.deped.gov.ph/detail/6565.

"What Makes Object Moves". 2012. *Deped LR Portal*. . Accessed April 27, 2021. https://lrmds.deped.gov.ph/detail/2874.

K to 12 curriculum guide Science (Grade3 to grade 10). (2016). Department of Education. https://www.deped.gov.ph/wp-content/uploads/2019/01/Science-CG_with-tagged-sci-equipment_revised.pdf

For inquiries or feedback, please write or call:

Department of Education - Bureau of Learning Resources (DepEd-BLR)

Ground Floor, Bonifacio Bldg., DepEd Complex
Meralco Avenue, Pasig City, Philippines 1600

Telefax: (632) 8634-1072; 8634-1054; 8631-4985

Email Address: blr.lrqad@deped.gov.ph * blr.lrpd@deped.gov.ph